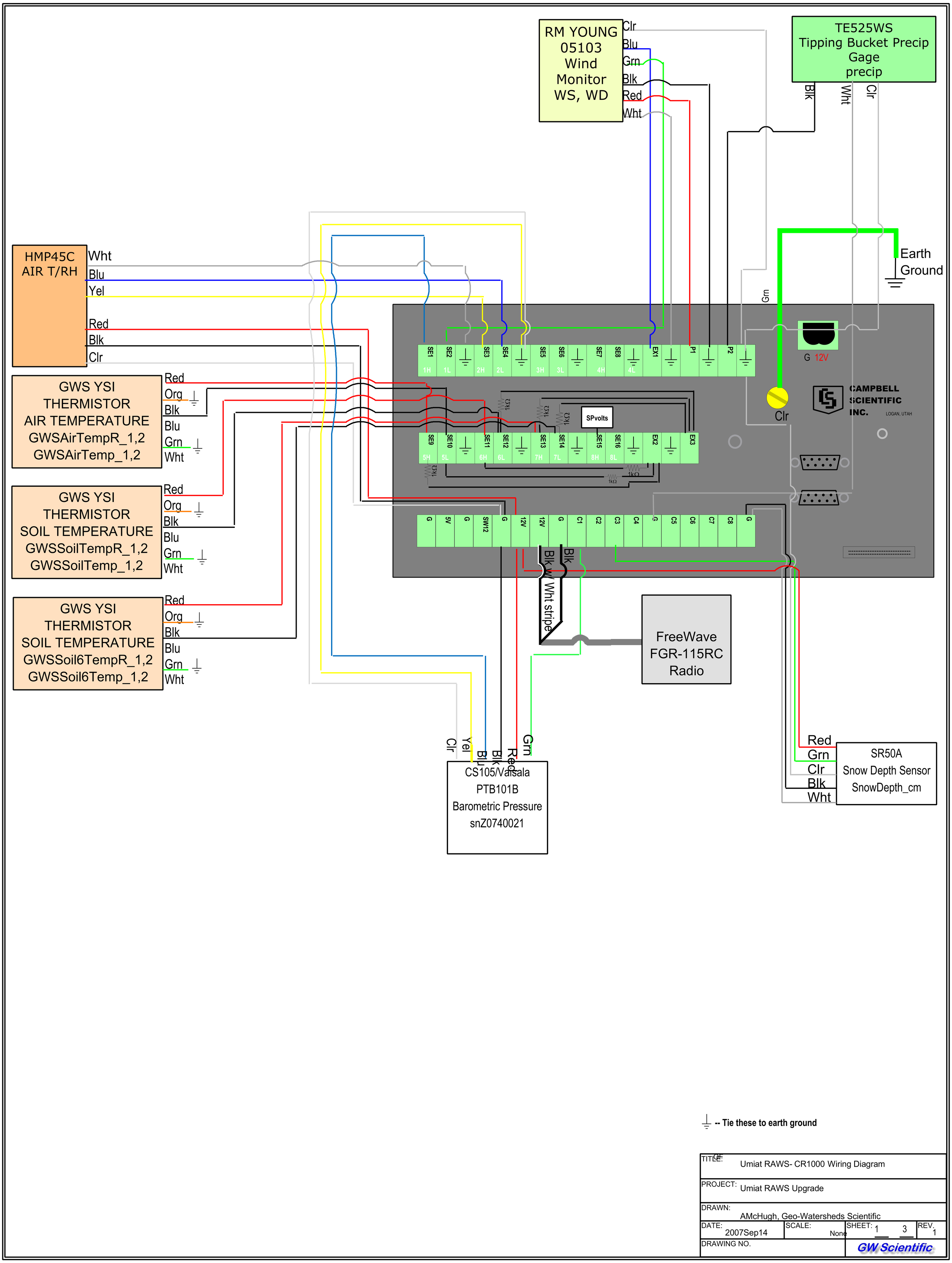

TITLE: Umiat RAWS- CR1000 Wiring Diagram			
PROJECT: Umiat RAWS Upgrade			
DRAWN: AMcHugh, Geo-Watersheds Scientific			
DATE: 2007Sep14	SCALE: None	SHEET: 1 of 3	REV. 1
DRAWING NO.		GW Scientific	